DATE	REVISION	ECO	CHANGES	APPROVED
4/8/05	4/8/05	14037	SWITCHED INPUT AND OUTPUT	BB/SL

NOTES:
1) Ground, Supply Voltage are solderable terminals
2) RF connectors are field replaceable SMA female
3) Dimensions are subject to change in the interest of improved product performance

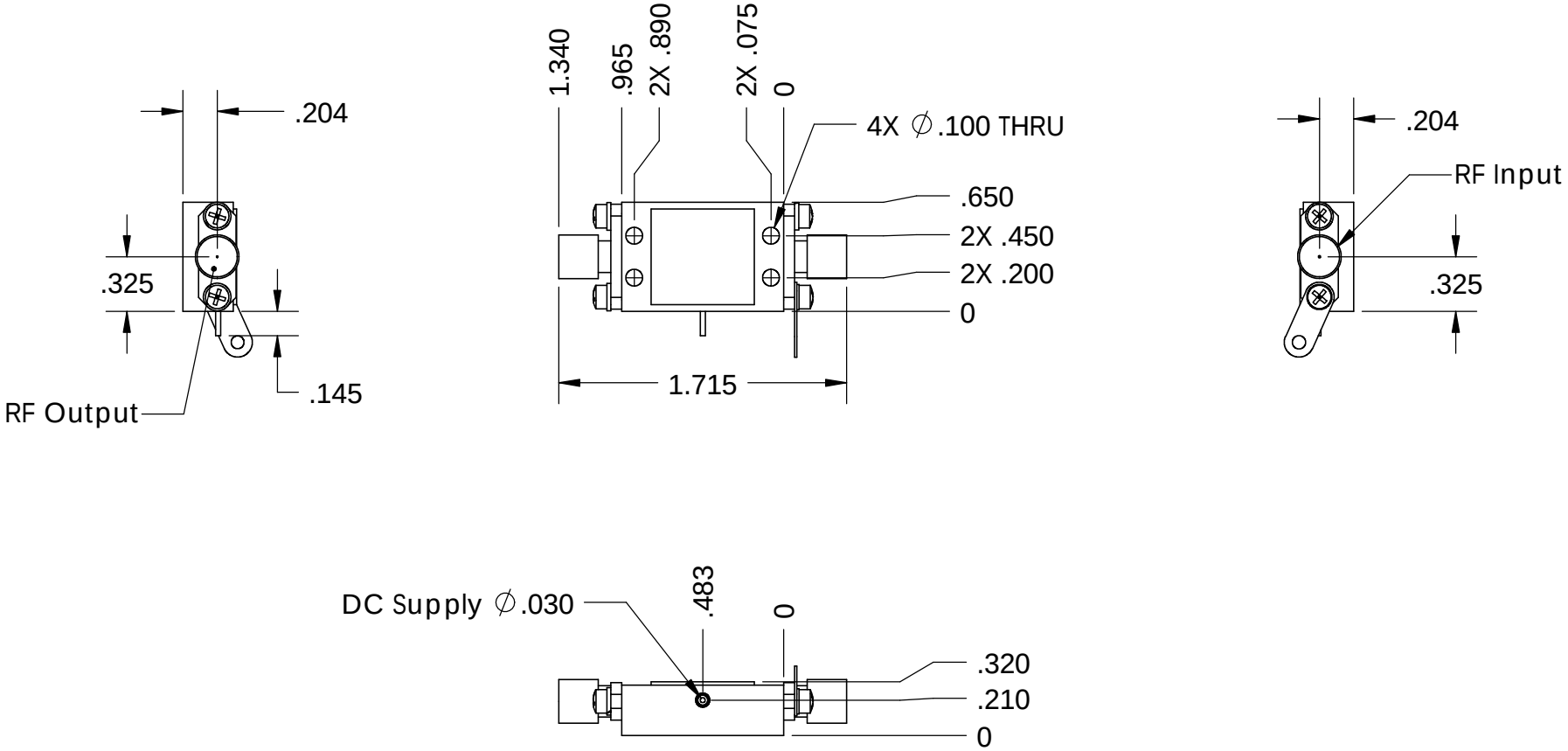

This document details ESD sensitive items or assemblies. Handle all such items or assemblies in accordance with Lucix OP-15-04, JESD-625, or comparable specification

UNLESS OTHERWISE SPECIFIED DIMENSIONS ARE IN INCHES
TOLERANCES ARE:
FRACTIONS DECIMALS ANGLES
±.010
±.01

MATERIAL n/a

FINISH n/a

DO NOT SCALE DRAWING

CAD GENERATED DRAWING, DO NOT MANUALLY UPDATE

APPROVALS	DATE
DRAWN B.Bufford	8/11/04
CHECKED	
RESP ENG B.Bufford	8/11/04
MFG ENG	
QUAL ENG	

Lucix Corporation

ALL INFORMATION CONTAINED IN THIS DRAWING IS THE SOLE PROPERTY OF THE LUCIX CORPORATION.

Outline,
SK2 Amplifier

SIZE A | DWG. NO. SK2 | REV. 4/8/05

SCALE 1:1 | CAD FILE: OL_Amp_250_2_NoCarr | SHEET 1 OF 1